Isolation of Sirohydrochlorin Methyl Ester from *E. coli* NADPH-Sulfite Reductase. A solution of *E. coli* NADPH-sulfite reductase (10 mL, 54 mg/mL)[7] in 0.05 M potassium phosphate buffer pH 7.7, 0.1 mM DTA, was frozen at −78 °C and lyophilized. Dry methanol (40 mL) and anhydrous ferrous sulfate (200 mg)[26] were added to the residue. Dry hydrogen chloride was bubbled through the suspension at 0 °C for 2 min. After stirring overnight in the dark at 20 °C the solution was diluted with chloroform, neutralized with saturated aqueous sodium bicarbonate, and worked up as usual. The residue was chromatographed as described above to yield chromatographically pure sirohydrochlorin methyl ester.

The *E. coli* NADPH-sulfite reductase contains 5.47 mg of siroheme per g of enzyme.[27] Assuming an extinction coefficient[27] of 2.4 $\times 10^4$ mol^{-1} cm^2 at 588 nm, the yield of sirohydrochlorin methyl ester was 0.95 μmol, i.e., about 30%. Spectroscopic properties are reported in the text (Tables I-III).

The samples of sirohydrochlorin methyl ester from *E. coli* enzyme and from *P. shermanii* cell-free homogenate migrated with identical R_f in benzene-ethyl acetate-methanol (80:16:4) (85:13:2 with multiple elution) and chloroform-methanol (9:1).

Acknowledgments. We thank NIH (Grant AM20528-01) for support of this work, Dr. A. Gossauer (Braunschweig) for high-resolution mass spectra, and Dr. P. Fagerness for the heteronuclear decoupling experiments. The 270-MHz spectra were determined at the Yale High Resolution NMR facility (RR-798).

References and Notes

(1) (a) Texas A&M University; (b) Duke University; (c) Varian Associates.
(2) (a) A. I. Scott, B. Yagen, N. Georgopapadakou, K. S. Ho, S. Klioze, E. Lee, S. L. Lee, G. H. Temme, III, C. A. Townsend, and I. M. Armitage, *J. Am. Chem. Soc.*, **97**, 2548 (1975); **98**, 2371 (1976) for a correction of authors. (b) A. I. Scott, *Philos. Trans. R. Soc. London, Ser. B*, **273**, 303 (1976). (c) A. I. Scott, *Acc. Chem. Res.*, **1**, 316 (1978), and references cited therein. (d) M. Kajiwara, K. S. Ho, H. Klein, A. I. Scott, A. Gossauer, J. Engel, E. Neumann, and H. Zilch, *Bioorg. Chem.*, **6**, 397 (1977).
(3) A. R. Battersby, M. Ihara, E. McDonald, F. Satoh, and D. C. Williams, *J. Chem. Soc., Chem. Commun.*, 436 (1975).
(4) H. Dauner and G. Müller, *Hoppe-Seyler's Z. Physiol. Chem.*, **356**, 1353 (1975).
(5) A. I. Scott, C. A. Townsend, K. Okada, M. Kajiwara, P. J. Whitman, and R. J. Cushley, *J. Am. Chem. Soc.*, **94**, 8267 (1972); A. I. Scott, C. A. Townsend, K. Okada, M. Kajiwara, R. J. Cushley, and P. J. Whitman, *ibid.*, **96**, 8069 (1974).
(6) A. I. Scott, B. Yagen, and E. Lee, *J. Am. Chem. Soc.*, **95**, 5761 (1973).
(7) L. M. Siegel, M. J. Murphy, and H. Kamin, *J. Biol. Chem.*, **248**, 251 (1973).
(8) M. J. Murphy, L. M. Siegel, H. Kamin, and D. Rosenthal, *J. Biol. Chem.*, **248**, 2801 (1973).
(9) V. Bykhovsky, N. I. Zaitseva, A. V. Umrikhina, and A. N. Yavorskaya, *Prikl. Biokhim. Mikrobiol.*, **12**, 825 (1976), and references cited therein.
(10) M. J. Murphy, L. M. Siegel, S. R. Tove, and H. Kamin, *Proc. Natl. Acad. Sci. U.S.A.*, **71**, 612 (1974).
(11) Y. Chang, P. S. Clezy, and D. B. Morell, *Aust. J. Chem.*, **20**, 959 (1967); A. Pelter, J. A. Ballantine, V. Ferrito, V. Jaccarini, A. F. Psaila, and P. J. Schembri, *J. Chem. Soc., Chem. Commun.*, 99 (1977).
(12) H. Scheer and J. J. Katz in "Porphyrins and Metalloporphyrins", K. M. Smith, Ed., American Elsevier, New York, N.Y., 1975, Chapter 10.
(13) (a) R. Bonnett, I. A. D. Gale, and G. F. Stephenson, *J. Chem. Soc. C*, 1168 (1967); (b) H. H. Inhoffen, J. W. Buchler, and R. Thomas, *Tetrahedron Lett.*, 1141 (1969).
(14) (a) R. Deeg, H-P. Kriemler, K-H. Bergmann, and G. Müller, *Hoppe-Seyler's Z. Physiol. Chem.*, **358**, 339 (1977); (b) K-H. Bergmann, R. Deeg, K. D. Gneuss, H-P. Kriemler, and G. Müller, *ibid.*, **358**, 1315 (1977).
(15) A. I. Scott, E. Lee, and C. A. Townsend, *Bioorg. Chem.*, **3**, 229 (1974).
(16) K. M. Smith and J. F. Unsworth, *Tetrahedron*, **31**, 367 (1975).
(17) The coupling constant given in the preliminary communication[20] is incorrect.
(18) (a) A. R. Battersby, K. Jones, E. McDonald, J. A. Robinson, and H. R. Morris, *Tetrahedron Lett.*, 2213 (1977). (b) A. R. Battersby, E. McDonald, H. R. Morris, D. C. Williams, V. Ya. Bykhovsry, N. I. Zaitseva, and V. N. Bukin, *ibid.*, 2217 (1977). (c) The Cambridge group recently proved structure 7 as correct and obtained proof of biointermediacy. A. R. Battersby, E. McDonald, M. Thompson, and V. Ya. Bykhovsky, *J. Chem. Soc., Chem. Commun.*, 150 (1978).
(19) For a discussion of this and related philosophical aspects of corrin biosynthesis see, for example, A. Eschenmoser, *Chem. Soc. Rev.*, **5**, 337 (1976); N. Georgopapakou, Ph.D. Thesis, Yale University, 1975; A. I. Scott, *Acc. Chem. Res.*, **11**, 316 (1978).
(20) D. P. Arnold and A. W. Johnson, *J. Chem. Soc., Chem. Commun.*, 787 (1977).
(21) This work was presented in part at the International Symposium on Stereochemistry, Kingston, Ontario, Canada, June 1976, and in detail at the Middle Atlantic Regional Meeting of the American Chemical Society, Newark, Del., April 1977. Preliminary communication: A. I. Scott, A. J. Irwin, L. M. Siegel, and J. N. Shoolery, *J. Am. Chem. Soc.*, **100**, 316 (1978).
(22) K. Bernhauer, E. Becher, and G. Wilharm, *Arch. Biochem.*, **83**, 248 (1959).
(23) O. H. Lowry, N. J. Rosebrough, A. L. Farr, and R. J. Randall, *J. Biol. Chem.*, **193**, 265 (1951).
(24) A. E. A. Mitta, A. M. Ferramola, H. A. Sancovich, and M. Grinstein, *J. Labelled Compd.*, **3**, 20 (1967).
(25) A. R. Battersby, E. Hunt, E. McDonald, and J. Moron, *J. Chem. Soc., Perkin Trans. 1*, 2917 (1973).
(26) M. Grinstein, *J. Biol. Chem.*, **167**, 515 (1947).
(27) L. M. Siegel, personal communication.

The Structure of 9,9′-Bitriptycyl

M. H. P. Ardebili,[1a] D. A. Dougherty,[1b] K. Mislow,*[1b] L. H. Schwartz,*[1c] and J. G. White*[1a]

Contribution from the Departments of Chemistry, Fordham University, Bronx, New York 10458, Princeton University, Princeton, New Jersey 08540, and City University of New York, City College, New York, New York 10031.
Received April 24, 1978

Abstract: The molecular structure of 9,9′-bitriptycyl has been determined by X-ray crystallography and empirical force field calculations. Agreement is excellent for all bond lengths and angles except for the central bond, where the X-ray distance is 0.031 Å shorter than the calculated value. This discrepancy may be rationalized, in part at least, by invoking rehybridization of the central carbon atoms as a result of strain-induced distortions of valence bond angles; such electronic effects are not taken into account by current empirical force fields.

Introduction

9,9′-Bitriptycyl (**1**) and its derivatives offer the possibility for a number of revealing studies. Molecular models indicate that the opposing inner peri carbon and hydrogen atoms are in very close proximity to each other. The resulting large steric strain should cause appreciable distortion from normal bond distances and angles. It was therefore of interest to carry out an X-ray analysis of **1**, and to compare the results to those of less crowded, but structurally related, compounds.

Also of interest is a comparison of the results of the X-ray analysis and empirical force field (EFF) calculations[2] on **1**. The substantial steric interactions present should pose a challenging test for these calculations.

Because of the close proximity of opposing groups, a large

0002-7863/78/1500-7994$01.00/0 © 1978 American Chemical Society

Table II. Coordinates and Thermal Parameters for All Atoms[a]

atom	x	y	z	β_{11}	β_{22}	β_{33}	β_{12}	β_{13}	β_{23}
C1	1101 (1)	0	3232 (2)	44 (1)	35 (1)	87 (2)	0	9 (2)	0
C2	1934 (2)	0	4623 (2)	62 (1)	54 (1)	80 (2)	0	2 (3)	0
C3	3134 (2)	0	4464 (2)	57 (1)	54 (1)	99 (3)	0	−45 (3)	0
C4	3517 (1)	0	2904 (2)	37 (1)	38 (1)	118 (3)	0	−19 (3)	0
C5	2926 (1)	1609 (1)	−1862 (2)	45 (1)	37 (1)	118 (2)	−21 (1)	36 (2)	−2 (2)
C6	2261 (1)	2364 (1)	−2620 (2)	67 (1)	34 (1)	131 (2)	−24 (1)	41 (2)	24 (2)
C7	1050 (1)	2380 (1)	−2556 (2)	65 (1)	29 (1)	125 (2)	−1 (1)	18 (2)	24 (2)
C8	487 (1)	1657 (1)	−1729 (1)	43 (1)	29 (1)	103 (2)	1 (1)	12 (2)	8 (1)
C9	681 (1)	0	−55 (2)	35 (1)	24 (1)	70 (1)	0	7 (2)	0
C10	2987 (1)	0	−245 (2)	30 (1)	34 (1)	99 (1)	0	15 (2)	0
C17	1469 (1)	0	1654 (2)	34 (1)	24 (1)	80 (2)	0	−5 (2)	0
C18	2688 (1)	0	1518 (2)	38 (1)	27 (1)	93 (2)	0	4 (2)	0
C19	1143 (1)	893 (1)	−984 (1)	38 (1)	25 (1)	76 (1)	−7 (1)	12 (2)	−5 (1)
C20	2370 (1)	879 (1)	−1065 (1)	39 (1)	29 (1)	84 (1)	−10 (1)	13 (2)	−7 (1)
atom	x	y	z	B					
H1	22 (2)	0	337 (3)	3.0 (4)					
H2	167 (2)	0	569 (3)	3.4 (4)					
H3	370 (3)	0	545 (4)	5.6 (6)					
H4	436 (2)	0	275 (3)	3.2 (4)					
H5	379 (1)	159 (1)	−185 (2)	3.0 (3)					
H6	265 (1)	287 (1)	−318 (2)	3.7 (3)					
H7	56 (1)	290 (1)	−310 (2)	3.4 (3)					
H8	−35 (1)	170 (1)	−168 (2)	2.4 (2)					
H10	388 (2)	0	−35 (3)	2.2 (3)					

[a] Fractional coordinates are $\times 10^4$ for the C atoms and $\times 10^3$ for the H atoms. The anisotropic temperature factor used for the C atoms is $\exp[-(\beta_{11}h^2 + \beta_{22}k^2 + \beta_{33}l^2 + \beta_{12}hk + \beta_{13}hl + \beta_{23}kl]$. For the H atoms an isotropic temperature factor $\exp(-B \sin 2\theta/\lambda^2)$ was used.

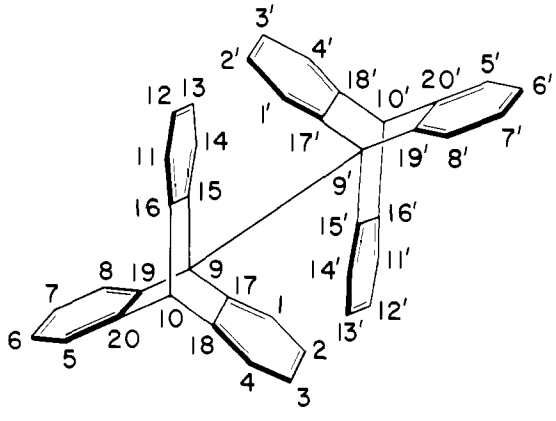

1

rotational barrier should exist about the C9–C9′ bond in **1** and its derivatives. The results of one such study have already been published.[3] An enormous barrier, in excess of 54 kcal mol^{-1}, was found for 2,2′-dimethyl-9,9′-bitriptycyl.

We report herein on the X-ray analysis and the EFF calculations of **1**.

Experimental Section

9,9′-Bitriptycyl was synthesized according to the previously published procedure.[4]

X-ray Analysis. Colorless, almost transparent crystals were grown by slow cooling from solution in nitrobenzene. The crystals are monoclinic with a = 11.338 (2) Å, b = 13.751 (2) Å, c = 8.130 (1) Å, β = 96.41 (1)°, V = 1259.6 Å^3. The space group is $C2/m$ with two molecules per unit cell, d_m = 1.30 (flotation in carbon tetrachloride-isooctane), d_c = 1.33 g cm^{-3}, μ(Cu Kα) = 5.85 cm^{-1}. The cell parameters and their standard deviations were obtained from a least-squares fit of the angular settings of 15 high-angle reflections.

Intensity data were collected on an Enraf-Nonius CAD4 diffractometer, using Ni-filtered Cu Kα radiation up to a limit of θ = 75°. The ω–2θ scanning mode was used and two standard reflections were measured at intervals of 25 reflections. On the criterion $I/\sigma_I > 1.5$, 1279 out of 1316 measured independent reflections were accepted as observed. Data reduction was carried out by program NRC-2.[5] In view of the favorable crystal size and shape, ~0.2 × 0.2 × 0.2 mm, absorption corrections were not made.

The Laue symmetry is $2/m$ and the only systematically absent reflections were those due to C-centering. Second harmonic analysis[6] showed that the crystals are centrosymmetric and the space group is therefore $C2/m$. The asymmetric unit consists of the atoms C1–4, C9–10, C17–18, which lie in a mirror plane, and C5–8, C19–20 in general positions, together with the bonded H atoms in each case. The structure was solved by a combination of Patterson and direct methods, and block diagonal least-squares refinement (program NRC-10[5]) of positional and anisotropic thermal parameters for the carbon atoms gave R = 0.089. All hydrogen atoms were then located from a difference electron density map computed by program NRC-8.[5] Subsequent refinement of all positional parameters, anisotropic thermal parameters for the C atoms, and isotropic thermal parameters for the H atoms, using full-matrix least-squares methods[7] in the final cycles, led to R = 0.051, R_w = 0.065. Exclusion from refinement of the 25 reflections with $\sin^2\theta < 0.06$ reduced R to 0.040 but gave no significant change in either parameters or standard deviations. The weighting scheme used was based on the counting statistics for the observed reflections while the unobserved reflections were weighted as zero. The function minimized was $\Sigma w(|F_o| - k|F_c|)^2$, and the form factors used were those given in the International Tables[8] for C and by Stewart et al.[9] for H. The observed and calculated structure factors are found in Table I (microfilm edition). The structural parameters for all atoms and the corresponding esd's are given in Table II. Molecular geometry calculations were carried out by programs NRC-12 and NRC-22[5] and the bond distances were corrected for molecular libration using program TLS.[10] These corrections were very small, ≤0.002 Å, but have been included in the final values discussed below.

Empirical Force Field Calculations. The EFF results for bitriptycyl have been reported in part elsewhere.[2] The data presented here (Table III) refer to the minimum energy structure obtained by modifying the central torsional angles of the previously described minimum[2] and relaxing the transformed structures.[11] This procedure led to only minor structural changes.

Results and Discussion

A stereoscopic pair of molecules is shown in the ORTEP drawing, Figure 1. The two halves of the molecule are in the staggered conformation. The molecular geometry found both

Table III. Observed and Calculated Bond Distances and Bond Angles

distances, Å			angles, deg		
atoms	obsd[a,c]	calcd[b]	atoms	obsd[a]	calcd[b]
C9-C9′	1.558 (3)[d]	1.589	C9′-C9-C17	114.8	115.4
C9-C17	1.566 (1, 2)	1.562	C17-C9-C19	103.7	103.0
C17-C1	1.392 (1, 2)	1.398	C18-C10-C20	106.0	106.1
C1-C2	1.394 (2, 2)	1.393	C9-C17-C1	128.0	129.1
C2-C3	1.382 (2, 2)	1.390	C9-C17-C18	113.7	114.9
C3-C4	1.387 (2, 2)	1.390	C17-C1-C2	120.1	122.1
C4-C18	1.386 (2, 2)	1.393	C1-C2-C3	120.9	120.4
C18-C17	1.400 (1, 2)	1.399	C2-C3-C4	119.6	118.8
C18-C10	1.514 (1, 2)	1.515	C4-C18-C17	121.4	122.6
			C4-C18-C10	124.8	124.2
			C17-C18-C10	113.8	113.2
			C1-C17-C18	118.4	116.1
			C3-C4-C18	119.6	119.9

[a] Mean of independent measurements. [b] Mean of independent EFF values. [c] Corrected for molecular libration. [d] The esd's of the independent bond distance measurements are given in parentheses; the esd's of the independent bond angle measurements are all 0.1°

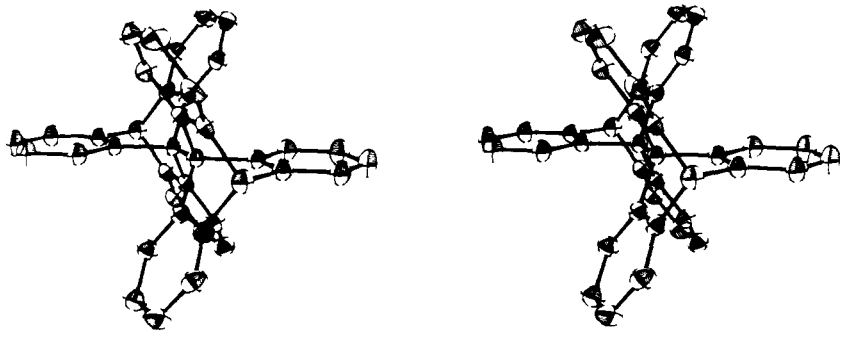

Figure 1. ORTEP drawing of a stereoview of the X-ray structure.

by the X-ray analysis and the EFF calculations has almost exact D_{3d} symmetry. In the crystal the molecule has strictly only C_{2h} symmetry, undoubtedly as a consequence of packing considerations, and the dihedral angles between the benzene rings in the same triptycyl unit are not exactly equal. That between the two rings related by a mirror plane is 116.8 (1)° while those between the other two pairs are 121.6 (1)°. However, in the bond distances and bond angles no distortion of the threefold axis is appreciably greater than the possible experimental error. The largest discrepancy between independently measured chemically equivalent bond distances is 0.005 Å while for the bond angles it is 0.6°. In the results of the EFF calculations where no symmetry element was assumed, the benzene rings are within 1.4° of being perpendicular to the plane formed by the atoms of these rings which are bonded to C9. The three independently calculated values of chemically equivalent bonds are all within 0.001 Å while for equivalent bond angles the largest difference is 1.4°, with 10 out of the 13 sets agreeing within 0.2°.

In view of the very close approximation to D_{3d} symmetry the independent values of equivalent bonds and angles have been averaged for comparison in Table III, where the standard deviations of separately measured bond distances are also given. The largest value, 0.0025 Å, is for the central bond C9-C9′. Since C9 and C9′ are related by a crystallographic symmetry center their positional errors are completely correlated. The separately measured bond angles all have esd's of 0.1°.

The observed and calculated molecular dimensions are in general in remarkable agreement. Calculations on the free molecule would not be expected to give perfect agreement with the experimental measurements on the crystal where the intermolecular force field is of lower symmetry. This could cause small changes in bond angles but the effect on bond distances is probably negligible. However, the discrepancy of 0.031 Å for the central bond C9-C9′ seems quite outside the possible error limits. This difference is 12 times the esd of the X-ray measurement and is four times as large as any other difference between observed and calculated bond distances. We note that fixing the C9-C9′ bond distance at the X-ray value of 1.558 Å and relaxing all other geometric parameters lead to an increase in energy of 0.3 kcal/mol but to no significant changes in other bond lengths and angles, which remain within 0.001 Å and 0.1°, respectively. Coupled with the ground-state EFF values of 115.4° for C9′-C9-C17 and 129.1° for C9-C17-C1 (as compared to the experimentally determined values of 114.8 and 128.0°, respectively), these results suggest that our force field overestimates the front strain (inter-end repulsions[2]) in bitriptycyl, as previously noted for other polyaryl systems.[12] While it is therefore understandable that the EFF values for the C9-C9′ bond distance might be somewhat longer than the found value, the magnitude of the discrepancy is nevertheless surprising. Furthermore, it seems remarkable that the central bond in the X-ray structure is not more extensively stretched, given the appreciable steric repulsions in the environment of the bond indicated by the expansion of the C9′-C9-C17 and C9-C17-C1 angles. Indeed, this front strain causes the C9-C17 sp^2-sp^3 bond to be *longer* than the C9-C9′ sp^3-sp^3 bond, in a noteworthy reversal of the usual order of standard bond lengths (by contrast, the C10-C18 sp^2-sp^3 bond length is consistent with the normal order; see below).

A possible explanation departs from the observation that EFF calculations are not parametrized for unusual electronic effects which may affect molecular structure, and are therefore useful in the detection of such effects.[13] The expansion of the C9′-C9-C17 angles causes a rehybridization of C9 and C9′ in such a way as to mix more s character into the hybrids forming the central bond. As a result, the C9-C9′ bond contracts,[14a] an effect which is not considered in the force field.[14b] To provide some indication of the potential magnitude of such

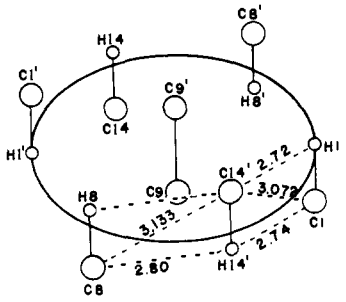

Figure 2. Independent observed C–C and C–H approaches shorter than the van der Waals distances between atoms in different triptycyl groups. The other short distances not specified are symmetry related. The C–H bonds lie on the surface of a cylinder whose axis is C9–C9′.

an effect we performed ab initio molecular orbital calculations[15] on ethane, using the 4-31G basis set.[16] Beginning with the 4-31G optimized ground-state geometry of ethane,[17] with a C–C bond length of 1.529 Å, C–H bond lengths of 1.083 Å, and C–C–H angles of 111.2°, we distorted the C–C–H angle to 115.0° (similar to the C9′–C9–C17 angles in bitriptycyl), and then reoptimized the C–C bond length, keeping the valence angles and the C–H distances fixed.[18] This procedure led to a decrease in the C–C distance to 1.505 Å,[19] suggesting that such angle deformations can indeed cause a significant decrease in bond length. It should be remembered, however, that the 0.024-Å shortening predicted by the above calculation represents an upper limit to the change induced by rehybridization since part of the decrease in length no doubt arises from the diminution of vicinal H···H nonbonded interactions caused by the expansion of the C–C–H angles.

The repulsion between the benzene rings in the two triptycyl groups causes four major deformations: stretching of the C9–C9′ bond and the C9–C17 bonds and widening of the angles C9′–C9–C17 and C9–C17–C1. These deformations reduce the repulsive forces by moving the benzene rings in the two halves of the molecule farther away from each other in a direction parallel to C9–C9′, and also by increasing the radius of the cylinder on the surface of which the peri C atoms and their bonded hydrogens lie. Nevertheless, some residual repulsive interactions remain. In Figure 2 the C–C and C–H distances found in the crystal structure which are less than the sum of the van der Waals radii are shown. The six distances between adjacent peri C atoms average 3.092 Å while the 12 C–H distances average 2.75 Å. If no deformation from normal distances and angles took place these distances would be 2.59 and 2.51 Å, respectively.

The very large rotational barrier reported for 2,2′-dimethyl-9,9′-bitriptycyl[3] can be explained in the light of these peri interactions. It is clear from Figure 2 that without additional distortion rotation of one triptycyl group relative to the other would cause three H atoms of one to pass almost through the center of the C–H bonds of the other. To accomplish this rotation, further large distortions, which would increase the strain energy enormously, would be necessary.

For comparable situations within the molecule our results are in good agreement with reported X-ray data on triptycene and its derivatives, which, however, are, in general, much less accurate than in the present work. The angles C18–C10–C20 average 105.3° in triptycene itself,[20] 107.4° in 9-bromotriptycene,[21,22] 106.3° in 1,2,3,4-tetrachloro-9-*tert*-butyltriptycene,[23] 105.9° in 9-(2-chloroethyl)triptycene,[24] and 105.4° in 1,4-dimethoxy-5-dimethylaminotriptycene hydrobromide;[22,25] in the same compounds the bonds C10–C18 average 1.534, 1.51, 1.505, 1.515, and 1.533 Å, respectively. Our values are intermediate in these ranges and our bond distance is in agreement with that calculated for a Csp^3–Csp^2 bond.[26] The "backsides" of 9,9′-bitriptycyl are therefore quite unstrained with respect to triptycene. Comparisons in the crowded region are more difficult. In 1,2,3,4-tetrachloro-9-*tert*-butyltriptycene[23] the interior cage angles at C9 average 103.4° and the bonds C9–C17 average 1.579 Å. On these criteria alone this compound might be regarded as being more strained at C9 than 9,9′-bitriptycyl, and a C9–Cα bond even longer than the measured value of 1.576 Å could be expected solely from strain considerations. However, the situation is complex, since the strain is asymmetric, due mainly to the peri-Cl–*tert*-butyl interaction, and detailed strain calculations on this compound would be desirable. The benzene rings bridge the strained and unstrained regions of 9,9′-bitriptycyl and both our observed and calculated results agree on the shortening of the outermost bonds, C2–C3, with respect to the innermost, C17–C18. This effect is less extreme, however, than that noted in the X-ray studies of triptycenes cited above, where the C2–C3 bonds in all the compounds average 1.373 Å.

Supplementary Material Available: Table I (observed and calculated structure factors) (14 pages). Ordering information is given on any current masthead page.

References and Notes

(1) (a) Fordham University. (b) Princeton University. Supported by Grant CHE77-07665 from The National Science Foundation. One of us (D.A.D.) thanks the Allied Chemical Corp. for a predoctoral fellowship. We are grateful to Linda D. Iroff for helpful discussions. (c) City University of New York. Partial support from the National Science Foundation, the Research Corporation, and the General Faculty Research Committee of the City College of New York is gratefully acknowledged.

(2) W. D. Hounshell, D. A. Dougherty, J. P. Hummel, and K. Mislow, *J. Am. Chem. Soc.*, **99**, 1916 (1977).

(3) L. H. Schwartz, C. Koukotas, and C. Yu, *J. Am. Chem. Soc.*, **99**, 7710 (1977).

(4) C. Koukotas, S. P. Mehlman, and L. H. Schwartz, *J. Org. Chem.*, **31**, 1970 (1966).

(5) F. R. Ahmed, S. R. Hall, M. E. Pippy, and C. P. Huber, NRC Crystallographic Programs for the IBM/360 System. Accession No. 133-147, *J. Appl. Crystallogr.*, **6**, 324 (1973).

(6) J. P. Dougherty and S. K. Kurtz, *J. Appl. Crystallogr.*, **9**, 145 (1976). We are indebted to M. Delfino of Philips Laboratories for making this measurement.

(7) W. R. Busing, K. O. Martin, and H. A. Levy, ORFLS, Report ORNL-TM-305, Oak Ridge National Laboratory, Oak Ridge, Tenn., 1962.

(8) "International Tables for X-ray Crystallography", Vol. III, Kynoch Press, Birmingham, England, 1965.

(9) R. F. Stewart, E. R. Davidson, and W. T. Simpson, *J. Chem. Phys.*, **42**, 3175 (1965).

(10) V. Schomaker and K. N. Trueblood, *Acta Crystallogr., Sect. B*, **24**, 63 (1968).

(11) D. N. J. White and O. Ermer, *Chem. Phys. Lett.* **31**, 111 (1975). See also L. D. Iroff and K. Mislow, *J. Am. Chem. Soc.*, **100**, 2121 (1978).

(12) J. F. Blount and K. Mislow, *Tetrahedron Lett.*, 909 (1975); D. A. Dougherty, K. Mislow, J. F. Blount, J. B. Wooten, and J. Jacobus, *J. Am. Chem. Soc.*, **99**, 6149 (1977).

(13) D. A. Dougherty, W. D. Hounshell, H. B. Schlegel, R. A. Bell, and K. Mislow, *Tetrahedron Lett.*, 3479 (1976); D. A. Dougherty, H. B. Schlegel, and K. Mislow, *Tetrahedron*, **34**, 1441 (1978).

(14) (a) See, for example, R. A. Alden, J. Kraut, and T. G. Traylor, *J. Am. Chem. Soc.*, **90**, 74 (1968), and reference cited therein. (b) More recently developed EFF's (e.g., D. H. Wertz and N. L. Allinger, *Tetrahedron*, **30**, 1579 (1974)) contain a stretch–bend term which produces bond length changes in the same direction as the rehybridization effect. However, the magnitude of such terms is negligible, and thus only minor changes in bond lengths result.

(15) Calculations were performed using the GAUSSIAN 70 system of programs: W. J. Hehre, W. A. Lathan, R. Ditchfield, M. D. Newton, and J. A. Pople, No. 236, Quantum Chemistry Program Exchange, Indiana University, Bloomington, Ind.

(16) R. Ditchfield, W. J. Hehre, and J. A. Pople, *J. Chem. Phys.*, **54**, 724 (1971).

(17) W. A. Lathan, W. J. Hehre, and J. A. Pople, *J. Am. Chem. Soc.*, **93**, 808 (1971).

(18) Related studies have recently been reported for methane (K. B. Wiberg, G. B. Ellison, and J. J. Wendoloski, *J. Am. Chem. Soc.*, **98**, 1212 (1976)) and several cycloalkanes (J. Kao and L. Radom, *ibid.*, **100**, 379 (1978)).

(19) This structure, obtained by parabolic interpolation, had a total energy of −79.111 324 au.

(20) K. Anzenhofer and J. J. de Boer, *Z. Kristallogr., Kristallgeom., Kristallphys., Kristallchem.*, **131**, 103 (1970).

(21) K. J. Palmer and D. H. Templeton, *Acta Crystallogr., Sect. B.*, **24**, 1048 (1968).

(22) Our numbering scheme.

(23) M. Mikani, K. Toriumi, M. Konna, and Y. Saito, *Acta Crystallogr., Sect. B*, **31**, 2474 (1975).

(24) I. L. Karle and J. A. Estlin, *Z. Kristallogr., Kristallgeom., Kristallphys., Kristallchem.*, **128**, 371 (1969).

(25) N. Sakabe, K. Sakabe, K. O. Minakata, and J. Tanaka, *Acta Crystallogr., Sect. B*, **28**, 3441 (1972).

(26) M. J. S. Dewar and H. N. Schmeising, *Tetrahedron*, **11**, 96 (1960).